DM-TMYTA

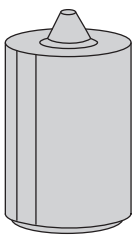

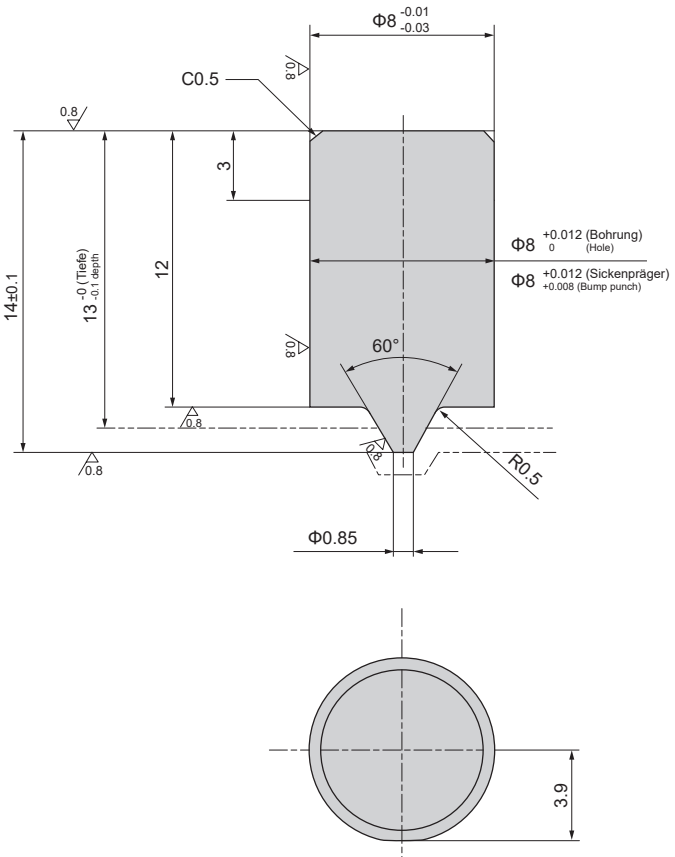

Material: C105U
Härte: HRC56-60

Material: C105U
Hardness: HRC56-60

Bestellnummer / Order Number

Bestellnr. / Catalog No.

DM-TMYTA

DM-TMYTB

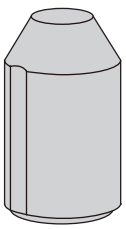

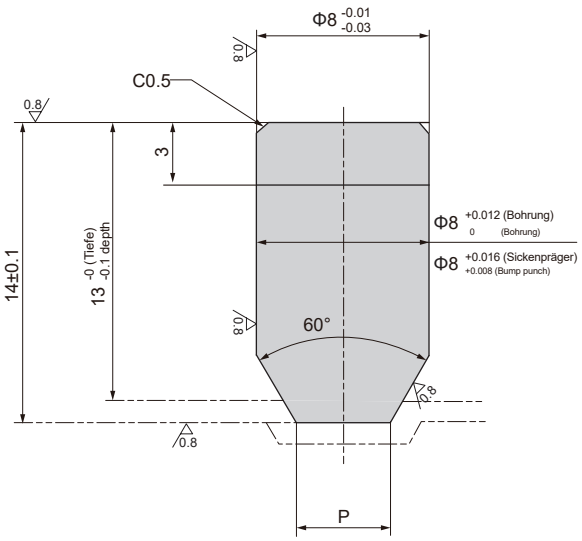

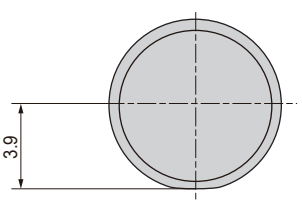

Material: C105U
Härte:HRC56-60

Material: C105U
Hardness:HRC56-60

Bestellnummer / Order Number

Bestellnr. / Catalog No.

DM-TMYTB